NOT TO SCALE

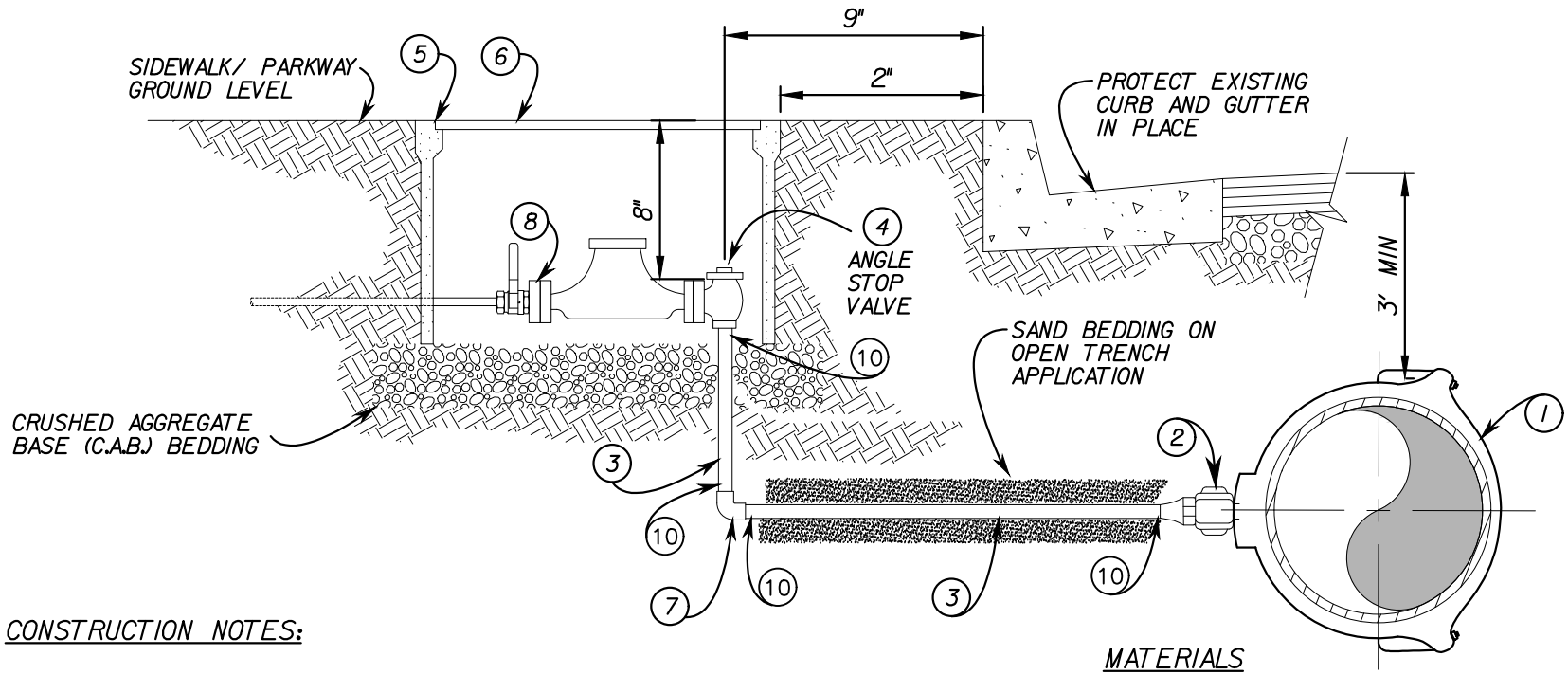

CONSTRUCTION NOTES:

1. SERVICE SADDLE SHALL NOT BE INSTALLED WITHIN 24" OF VALVE, COUPLING, JOINT OR FITTING. TAPPED COUPLINGS ARE NOT PERMITTED.
2. INSTALL CORPORATION STOP IN OPEN POSITION.
3. THE WATER SERVICE SHALL EXTEND PERPENDICULAR TO THE CENTERLINE OF THE STREET FROM THE WATERMAIN TO THE ANGLE STOP.
4. METER BOXES SHALL BE SET 2" FROM THE BACK OF CURB.
5. EACH METER SHALL HAVE A CUSTOMER SHUT OFF VALVE.
6. METER BOX AND LID SHALL BE FURNISHED BY CONTRACTOR.
7. INSTALL APPROPRIATE REDUCER FOR 1.5" METER SERVICE.
8. INSTALL #12 GAUGE TRACER WIRE ALONG WITH ALL PEX TUBING.

1.5 & 2-INCH RECYCLED SERVICE

MATERIALS

ITEM NO.	SIZE & DESCRIPTION	MANUFACTURER	SPEC. NO.
1	DOUBLE STRAP BRONZE SERVICE SADDLE 2" F.J.P. OUTLET	JONES MUELLER	J-979 EQUAL
2	2" BRONZE CORPORATION VALVE BALL TYPE M.J.P. x CTS	JONES MUELLER	E-1935SG H-15028N
3	2 "PURPLE" PEX TUBING	MUNICIPEX	SDR9 (CTS)
4	2" ANGLE METER VALVE CTS x METER FLG	JONES MUELLER	E-1975WSG EQUAL
5	METER BOX	J & R	#6B CONCRETE
6	METER LID	DFW	DFWPW6C-4 (PURPLE MARKED RWD)
7	2" CTS x CTS 90		
8	CUSTOMER BALL SHUT-OFF VALVE F.J.P. x METER FLG	JONES MUELLER	E-1912W EQUAL
9	WATER METER (SIZE VARIES)	SUPPLIED BY DISTRICT	
10	2" CTS PIPE INSERT	JONES MUELLER	J-2808 M528705

APPROVED BY:

Tom Coleman 07/07/2023

TOM COLEMAN — DATE

GENERAL MANAGER

DRAWING # W-2R

REVISION DATE: JULY 2023

ROWLAND WATER DISTRICT

1.5" & 2" RECYCLED SERVICE DETAIL